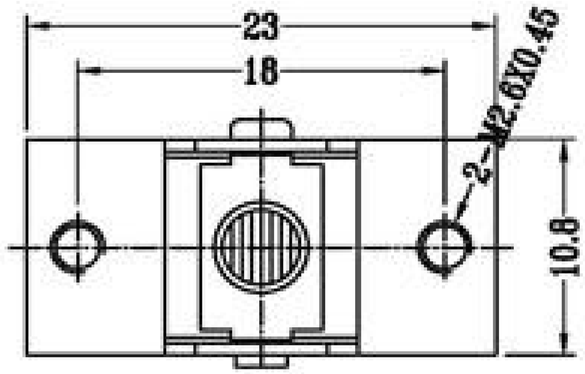

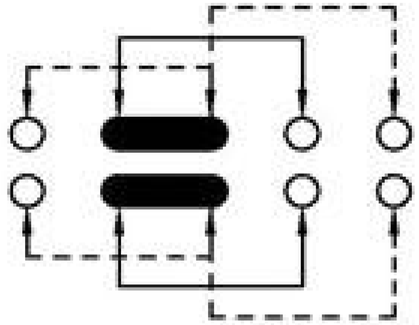

SCHEMATIC (SHORTING)

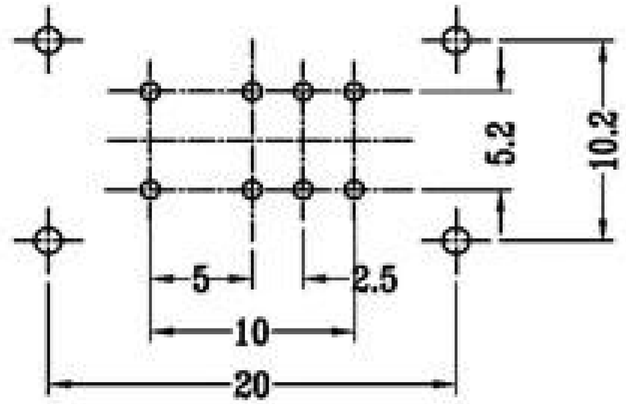

P.C.B LAYOUT

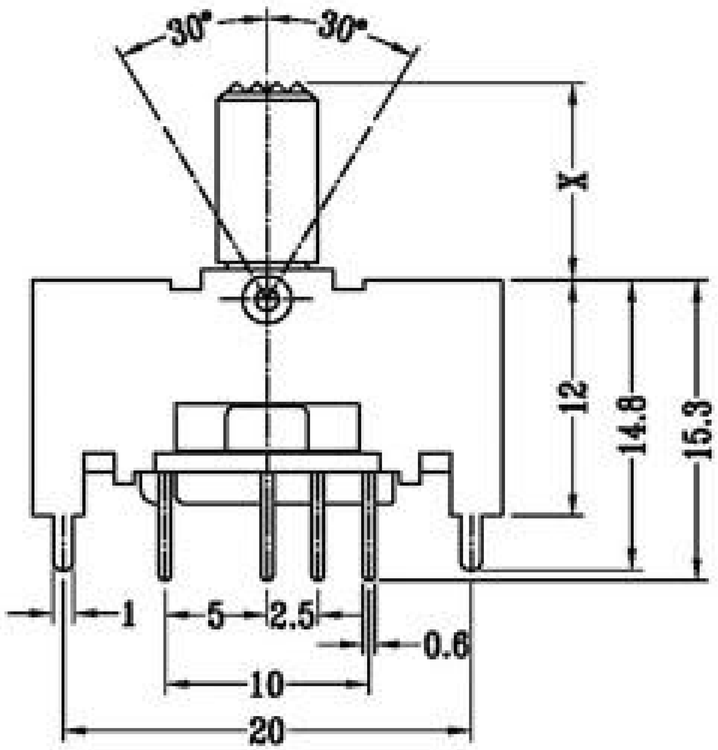

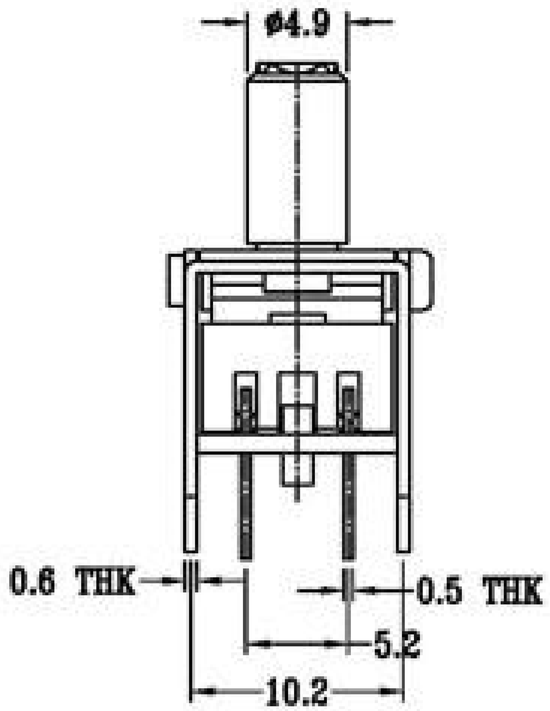

拨动开关技术参数:
1.额定负荷:DC30V50V 0.3A 0.5A
2.接触阻抗:≤50m Ω
3.绝缘阻抗:≥100mΩDC500V
4.耐焊温度:250±5°5s
5.使用寿命: 10,000 cycles
6.使用温度:-25℃to 80℃
7.使用湿度:≤85% RH
8.操作力:160gf256gf300gf可定制
9.手柄长度:2mm-10mm可定制

ITEM NO.	DESCRIPTION	DRAWN	DATE

東莞市高迪電子有限公司
DONG GUAN GAO DI ELECTRONICS CO. , LTD

TOLERANCE UNLESS OTHERWISE STATED : Up to 5 ±0.2; Above 5 ~ 15 ±0.3; Above 15 ~ 30 ±0.4; Above 30 ~ 50 ±0.5; Angle ±0.3°

3RD. ANGEL'S | UNITS MM

DRAWN BY: Ming Ming Zou	DATE 10/31/13	MAT'L	
CHECKED BY: Ning Ning Su	DATE 10/31/13	FINISH	
APPROVED BY: Jia Xiang	DATE 10/31/13	SCALE	1 : 1
		SHEET NO.	1 of 1

TITLE	SWITCH+JACK		
MODLE	AC POWER SOCKET		
DWG NO.	GD-TS-23E01-AT15	SIZE	A4
PART NO.		VER	R